ORTAL
YOUR LIFE. YOUR FIRE

7565H Tunnel Protection Net

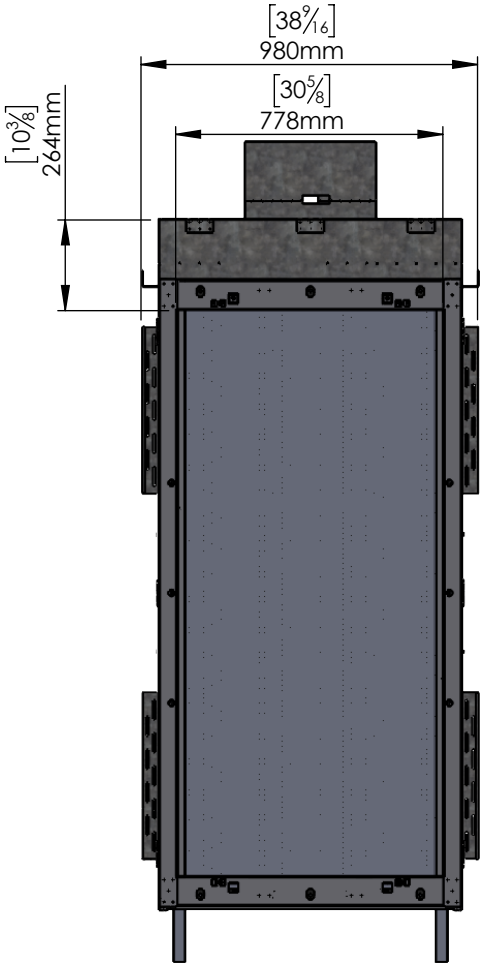

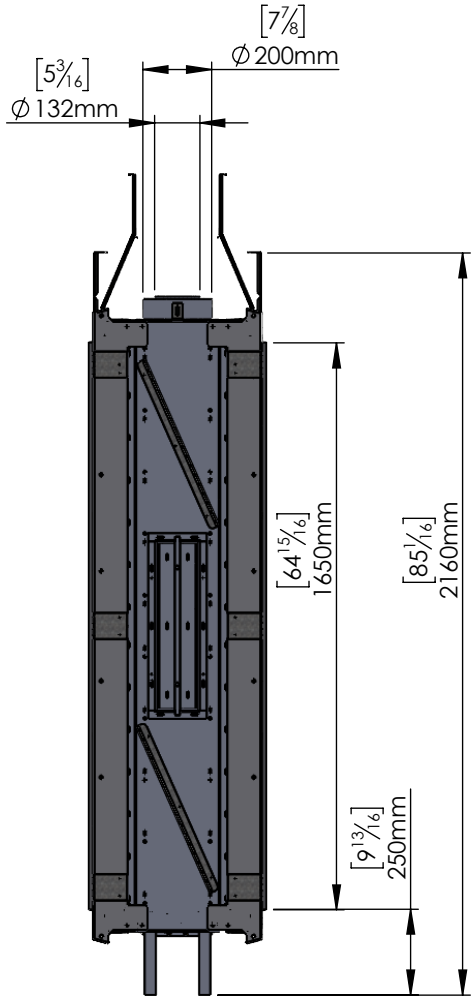

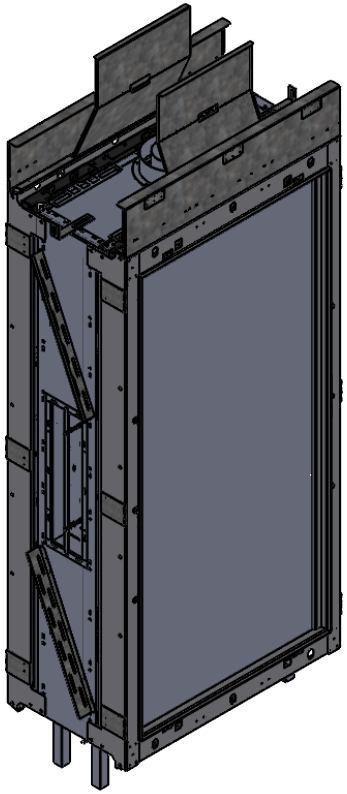

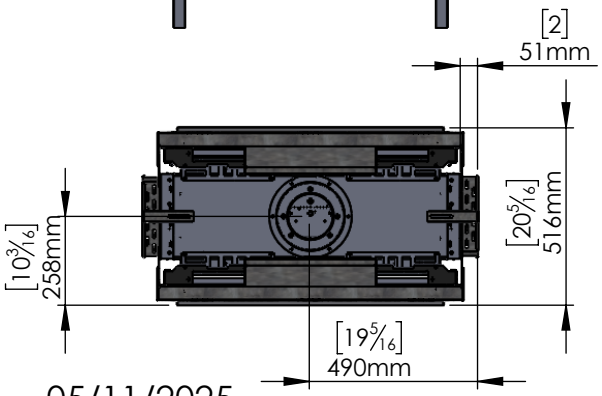

05/11/2025